Table of contents

		Page
Specifications/ Applications		2
MN 4020 Short extension length		4
MN 4030 Pipe extension	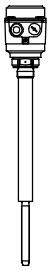	6
MN 4040 Pipe extension (screwed)	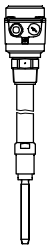	8
Options		10
Dimensions		12
Spare parts		13
Electrical installation		14

Subject to change.

All dimensions in mm (inches).

All prices in Euro (€) or USD ($), excluding VAT.

All EURO prices are EXW Betzigau, all USD prices are EXW Memphis, excluding packaging costs.

Valid: From 01.04.2018 until 31.03.2019, unless otherwise agreed.

By publishing this selection list all other lists become invalid.

We assume no liability for typing errors.

Different variations to those specified are possible. Please contact our technical consultants.

Specifications

- Level limit detection in bulk goods/ solids
- Compact unit
- Die-casted housing aluminium
- Wide range of applications, no maintenance
- Full-, demand-, empty detector
- Sensitivity > 20 g/l (1.25 lb/ft³)
- 4 sensitivity settings selectable
- ATEX, IEC-Ex, FM approvals (DustEx)
- 1935/2004/EC Food grade materials
- 2011/65/EU RoHS conform

Approvals	CE	
	ATEX/ IEC-Ex	Zone 20/21 (Dust Ignition Proof)
	FM	Ordinary Locations
		Cl. II, III Div. 1 (Dust Ignition Proof)
	TR-CU	Ordinary Locations
		Zone 20/21 (Dust Ignition Proof)

Electro-nics	Relay DPDT	21 .. 230 V AC 22 .. 45 V DC ±10%
	PNP	20 .. 40 V DC ±10%

MN 4020	Length of extension	160 mm (6.3“)
	Ambient temperature	-40 .. +60°C (-40 .. +140°F)
	Process temperature	-40 .. +150°C (-40 .. +302°F)
	Process pressure	-1 .. +16 bar (-14.5 .. +232 psi)
	Process connection material/ Extension	1.4301 (304)/ 1.4541 (321) or 1.4404 (316L) (food grade)

MN 4030	Length of extension	200 .. 4,000 mm (7.9 .. 157”)
	Ambient temperature	-40 .. +60°C (-40 .. +140°F)
	Process temperature	-40 .. +150°C (-40 .. +302°F)
	Process pressure	-1 .. +16 bar (-14.5 .. +232 psi)
	Process connection material/ Extension	1.4301 (304)/ 1.4541 (321) or 1.4404 (316L) (food grade)

MN 4040	Length of extension	max. 1,500 mm (59") or 4,000 mm (157”)
	Ambient temperature	-40 .. +60°C (-40 .. +140°F)
	Process temperature	-40 .. +150°C (-40 .. +302°F)
	Process pressure	-1 .. +16 bar (-14.5 .. +232 psi)
	Process connection material/ Extension	1.4301 (304)/1 .4541 (321) or 1.4404 (316L) (food grade)

MN 4020

MN 4040

MN 4030

Wolf Process Automation
info@wpa.ie
wpa.ie

Applications

Detection of solids

MN 4020

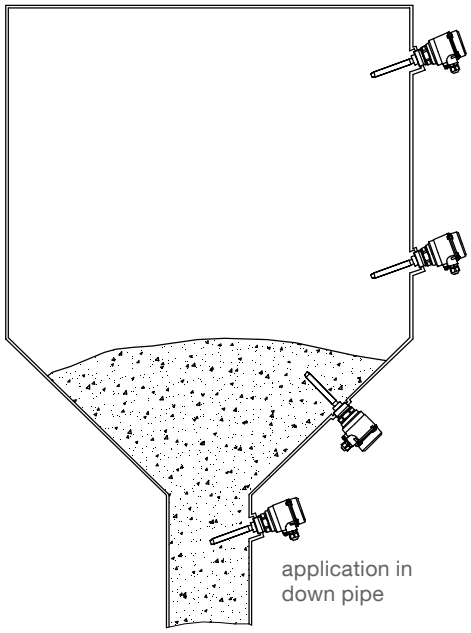

MN 4030
MN 4040

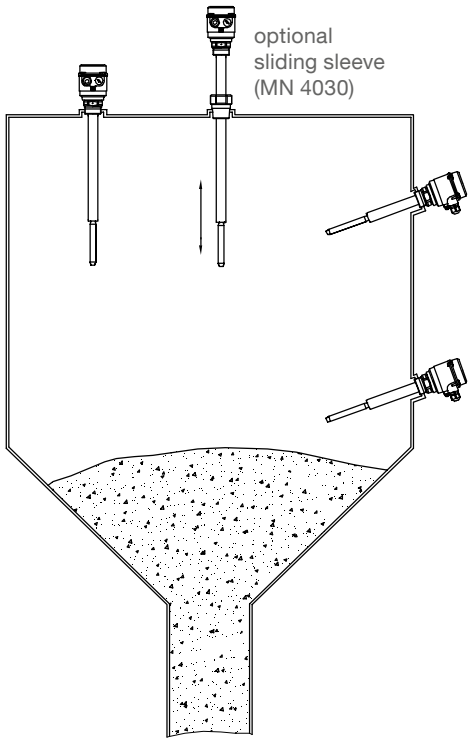

Type text here

Wolf Process Automation
info@wpa.ie
wpa.ie
SOLUTIONS

MN 4020 Short extension length

Materials inside process: Food grade

Cable entries (by default)
Depending on model selected the following cable entries are supported (options see pos.23 on page 10):

Version:	Cable entries:
CE/ ATEX/ IEC-Ex/ TR-CU (pos.2 0,W,A,E)	M20 x 1.5 (1x cable gland + 1x blind plug)
FM (pos.2 M,N)	NPT ½“ tapered ANSI B1.20.1 (1x open conduit + 1x blind plug)

Dimensions see page 12

pos.3
Temperature extended shaft

Application up to 150°C (302°F)

1 without
2 with

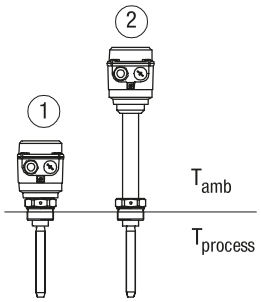

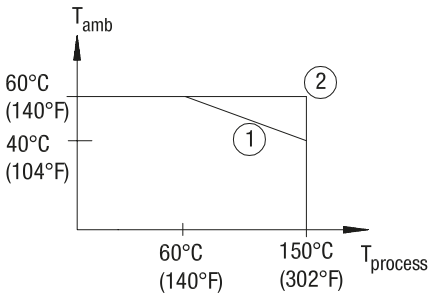

Wolf Process Automation
info@wpa.ie
wpa.ie
SOLUTIONS

MN 4020 Short extension length

Basic type

MN 4020 ..... •

pos.2 **Certificate**

0	CE [1]	•
W	ATEX II 1/2D Ex ta/tb IIIC T! Da/Db	•
A	IEC-Ex ta/tb IIIC T! Da/Db	•
M	FM General Purpose	•
N	FM DIP Cl. II, III Div.1 Group E, F, G	•
E	TR-CU Ex ta/tb IIIC T! Da/Db X	•

pos.3 **Temperature extended shaft**

1	without (up to $T_{process}$ = 150°C (302°F) at T_{amb} < 40°C (104°F))	•
2	with (up to $T_{process}$ = 150°C (302°F) at T_{amb} > 40°C (104°F))	•

pos.4 **Electronic module**

L	Relay DPDT	21 .. 230 V AC 22 .. 45 V DC	•
D	PNP	20 .. 40 V DC	•

pos.5 **Process connection**

A	Thread G 1½"	DIN 228	•	•
B	Thread G 1¼"	DIN 228	•	•
C	Thread G 1"	DIN 228	•	•
F	Thread NPT 1½"	conical ANSI B1.20.1	•	•
Q	Thread NPT 1¼"	conical ANSI B1.20.1	•	•
G	Thread NPT 1"	conical ANSI B1.20.1	•	•
P	Triclamp 2" (DN50) ISO 2852		•	•
L	Flange DN100 PN6, EN 1092-1 (max. 6 bar (87 psi))		•	•
M	Flange DN100 PN16, EN 1092-1		•	•
S	Flange 2" 150lbs ANSI B16.5		•	•
T	Flange 3" 150lbs ANSI B16.5		•	•
U	Flange 4" 150lbs ANSI B16.5		•	•

pos.8 **Material of process connection/ extension "L"**

1	Stainless steel 1.4301 (304)/ Flange 1.4541 (321)
2	Stainless steel 1.4404 (316L)

Further options: see page 10

MN 4020	A					3	1	
position	1	2	3	4	5	6	7	8

Order code

All positions are available in special design (use code "Z").

[1] TR-CU (general purpose) included

Type text here

Wolf Process Automation
info@wpa.ie
wpa.ie

SOLUTIONS

MN 4030 Pipe extension

Materials inside process: Food grade

Cable entries (by default)
Depending on model selected the following cable entries are supported (options see pos.23 on page 10):

Version:	Cable entries:
CE/ ATEX/ IEC-Ex/ TR-CU (pos.2 0,W,A,E)	M20 x 1.5 (1x cable gland + 1x blind plug)
FM (pos.2 M,N)	NPT ½“ tapered ANSI B1.20.1 (1x open conduit + 1x blind plug)

Dimensions see page 12

pos.3
Temperature extended shaft

Application up to 150°C (302°F)

1 without
2 without and with extended socket
3 with

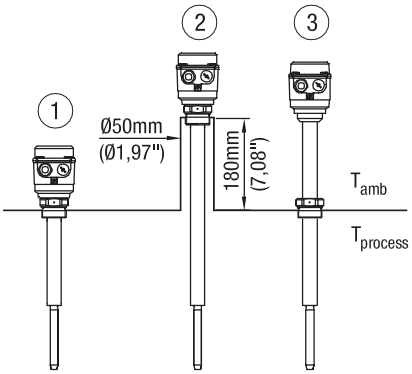

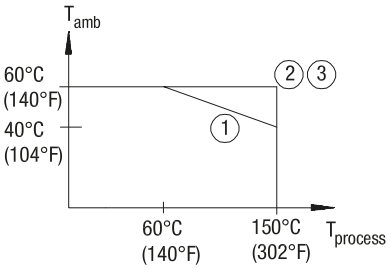

Wolf Process Automation
info@wpa.ie
wpa.ie
SOLUTIONS

MN 4030 Pipe extension

Basic type

MN 4030 ..... •

pos.					
		Certificate			
	0	CE [1]		•	
	W	ATEX II 1/2D Ex ta/tb IIIC T! Da/Db		•	
	A	IEC-Ex ta/tb IIIC T! Da/Db		•	
	M	FM General Purpose		•	
	N	FM DIP Cl. II, III Div.1 Group E, F, G		•	
	E	TR-CU Ex ta/tb IIIC T! Da/Db X		•	
pos.3		**Temperature extended shaft**			
	1	without (up to $T_{process}$ = 150°C (302°F) at T_{amb} < 40°C (104°F))		•	
	2	with (up to $T_{process}$ = 150°C (302°F) at T_{amb} > 40°C (104°F))		•	
pos.4		**Electronic module**			
	L	Relay DPDT	21 .. 230 V AC 22 .. 45 V DC	•	
	D	PNP	20 .. 40 V DC	•	
pos.5		**Process connection**			
	A	Thread G 1½"	DIN 228	•	•
	B	Thread G 1¼"	DIN 228	•	•
	C	Thread G 1"	DIN 228	•	•
	F	Thread NPT 1½"	conical ANSI B1.20.1	•	•
	Q	Thread NPT 1¼"	conical ANSI B1.20.1	•	•
	G	Thread NPT 1"	conical ANSI B1.20.1	•	•
	P	Triclamp 2" (DN50) ISO 2852		•	•
	L	Flange DN100 PN6, EN 1092-1 (max. 6 bar (87 psi))		•	•
	M	Flange DN100 PN16, EN 1092-1		•	•
	S	Flange 2" 150lbs ANSI B16.5		•	•
	T	Flange 3" 150lbs ANSI B16.5		•	•
	U	Flange 4" 150lbs ANSI B16.5			
pos.7		**Length of extension "L"**			
	Z	from 0 mm per 100 mm (3.94") and part thereof; min. 200 mm (7.9"), max. 4,000 mm (157")		•	•
pos.8		**Material of process connection/ extension "L"**			
	1	Stainless steel 1.4301 (304)/ Flange 1.4541 (321)			
	2	Stainless steel 1.4404 (316L)			

Further options: see page 10

MN 4030	B					3	Z		-	L = mm
position	1	2	3	4	5	6	7	8		

Order code

All positions are available in special design (use code "Z").

[1] TR-CU (general purpose) included

Wolf Process Automation
info@wpa.ie
wpa.ie

SOLUTIONS

MN 4040 Pipe extension (screwed)

Materials inside process: Food grade

Cable entries (by default)
Depending on model selected the following cable entries are supported (options see pos.23 on page 10):

Version:	Cable entries:
CE/ ATEX/ IEC-Ex/ TR-CU (pos.2 0,W,A,E)	M20 x 1.5 (1x cable gland + 1x blind plug)
FM (pos.2 M,N)	NPT ½“ tapered ANSI B1.20.1 (1x open conduit + 1x blind plug)

Dimensions see page 13

Application up to 150°C (302°F)

1 without exteded socket
2 with extended socket

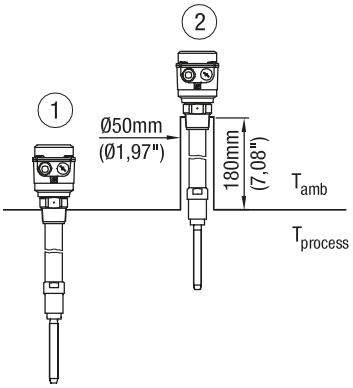

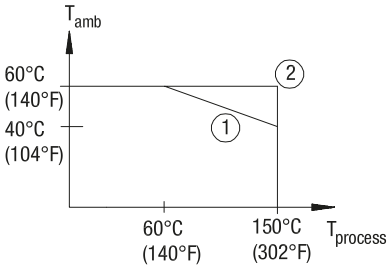

Wolf Process Automation
info@wpa.ie
wpa.ie

MN 4040 Pipe extension (screwed)

Basic type

MN 4040			•	

pos.2		**Certificate**			
	0	CE [1]		•	
	W	ATEX II 1/2D Ex ta/tb IIIC T! Da/Db		•	
	A	IEC-Ex ta/tb IIIC T! Da/Db		•	
	M	FM General Purpose		•	
	N	FM DIP Cl. II, III Div.1 Group E, F, G		•	
	E	TR-CU Ex ta/tb IIIC T! Da/Db X		•	
pos.4		**Electronic module**			
	L	Relay DPDT	21 .. 230 V AC 22 .. 45 V DC	•	
	D	PNP	20 .. 40 V DC	•	
pos.5		**Process connection**			
	A	Thread G 1½"	DIN 228	•	•
	F	Thread NPT 1½"	conical ANSI B1.20.1	•	•
	P	Triclamp 2" (DN50) ISO 2852		•	•
	L	Flange DN100 PN6, EN 1092-1 (max. 6 bar (87 psi))		•	•
	M	Flange DN100 PN16, EN 1092-1		•	•
	S	Flange 2" 150lbs ANSI B16.5		•	•
	T	Flange 3" 150lbs ANSI B16.5		•	•
	U	Flange 4" 150lbs ANSI B16.5		•	•
pos.7		**Length of extension "L"**			
	L	1,500 mm (59") (cutable cable length)		•	
	M	4,000 mm (157") (cutable cable length)		•	
pos.8		**Material of process connection/ extension "L"**			
	1	Stainless steel 1.4301 (304)/ Flange 1.4541 (321)			
	2	Stainless steel 1.4404 (316L)			

Further options: see page 10

MN 4040	C		1			3		
position	1	2	3	4	5	6	7	8

Order code

All positions are available in special design (use code "Z").

[1] TR-CU (general purpose) included

Wolf Process Automation
info@wpa.ie
wpa.ie

SOLUTIONS

Options

pos.11 x **Guarantee extension to 5 years** ..... •

pos.21 **Weather protection cover** ..... •
(for Ex only approved for Zone 22 or Div. 2)

Mounting set for flange mounting

	process connection flange	for counter flange with	consists of				
			screws*	nuts*	washers*	sealing**	
pos.22 c	L	hole ø18	4x M16 x 60	4x M16	4 pcs	1 piece	•
pos.22 d	L	thread M16	4x M16 x 40		4 pcs	1 piece	•
pos.22 e	M	hole ø18	8x M16 x 60	8x M16	8 pcs	1 piece	•
pos.22 f	M	thread M16	8x M16 x 40		8 pcs	1 piece	•

* material stainless steel A2 **max. 125°C (256°F), material not food grade

Cable entry
Selection of the following options only necessary, if a deviation from the default cable gland/ conduit is required:

pos.23 x M20 x 1.5 2x screwed cable gland [7] ..... •
pos.23 y M20 x 1.5 1x screwed cable gland +1x blind plug [7] ..... •
pos.23 a NPT ½" tapered ANSI B1.20.1 (1x conduit + 1x Ex-d blind plug) ..... •
pos.23 b NPT ¾" tapered ANSI B1.20.1 (1x conduit + 1x Ex-d blind plug) ..... on request

Sliding sleeve [6]
Process connection as follows or flange as choosen

[3] For applications without overpressure, max. 150°C (302°F)

pos.25 a G 1½ " DIN 228 material 1.4301 (304) ..... •
pos.25 b NPT 1½ inch ANSI B1.20.1 material 1.4301 (304) ..... •
pos.25 c Flange [5] material 1.4301 (304)/1.4541 (321) ..... •

For applications with overpressure max. 16 bar (232 psi), max. 150°C (302°F)

pos.25 e G 1½ " DIN 228 material 1.4404 (316L) ..... •
pos.25 f NPT 1½ inch ANSI B1.20.1 material 1.4404 (316L) ..... •
pos.25 g Flange [5] material 1.4404 (316L) ..... •

Signal lamp

pos.27 a Bulb, mounted in cable entry M20 x 1.5, 2 W green [1] ..... •
pos.27 c Bulb, mounted in cable entry M20 x 1.5, 2 W red [1] ..... •
pos.27 b LED (glass window in lid)[4] ..... •

pos.29 **Plug 4-pole** [2] **(incl. PE)** ..... •

[1] Available for CE (pos.2 0), not in combination with weather protection cover (pos.21) and cable entries pos.23 x,a,b.
For electronic module Relais DPDT (pos.4 L) three bulbs (24 V, 115 V and 230 V) will be delivered. For PNP (pos.4 D) a 24 V bulb will be delivered.
[2] Available for CE (pos.2 0)
[3] Available for CE and FM general purpose (pos.2 0,M)
[4] Not in combination with weather protection cover (pos.21)
[5] Flange as selected in pos.5
[6] Available for MN 4030
[7] Not for FM (pos.2 M,N)

Wolf Process Automation
info@wpa.ie
wpa.ie

Options

pos.21
Weather protection cover

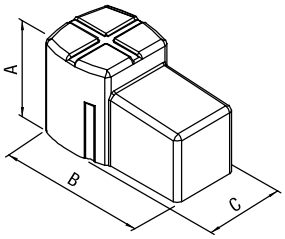

A	100 mm (3.94“)
B	165 mm (6.5“)
C	88 mm (3.46“)

pos.25
Sliding sleeve

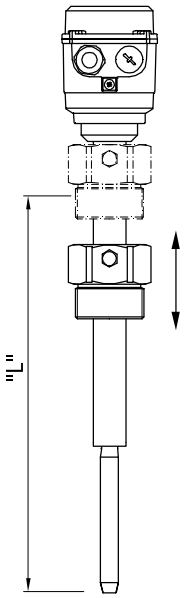

pos.29
Plug 4-pole

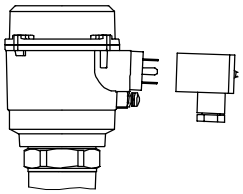

Signal lamp

pos.27 a,c
Bulb, mounted
in cable entry M20 x 1.5

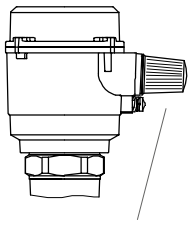

pos.27 b
LED (glass window in lid)

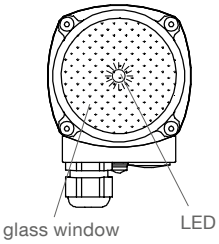

Wolf Process Automation
info@wpa.ie
wpa.ie

SOLUTIONS

Dimensions

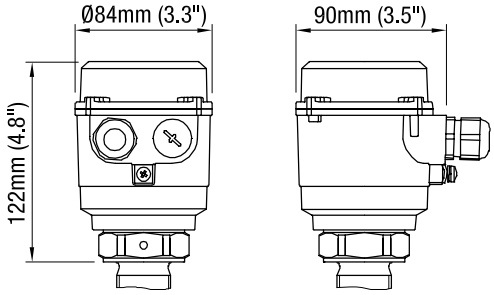

MN 4020

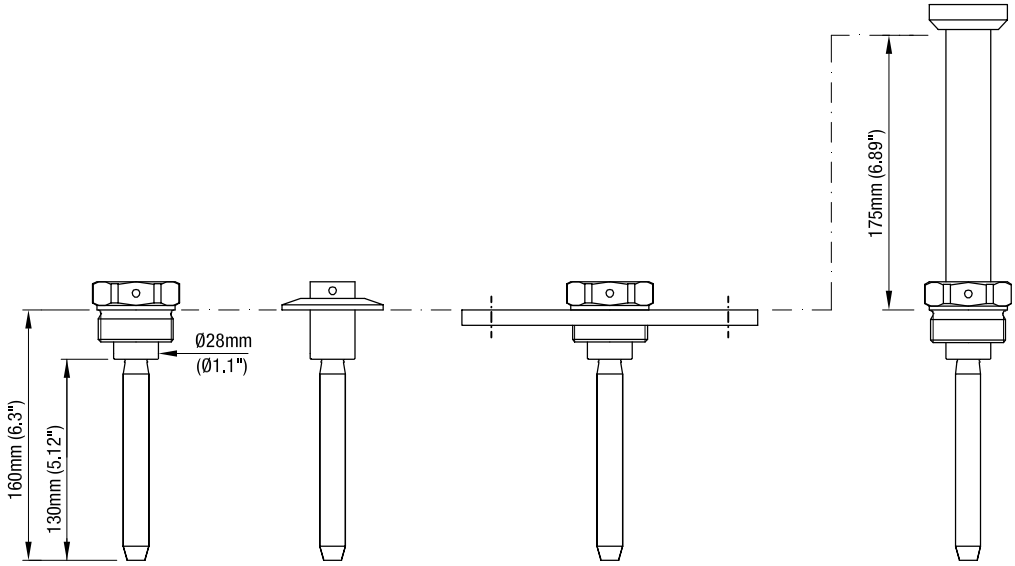

Thread | Triclamp | Flange | Temperature extended shaft (pos.3 2)

MN 4030

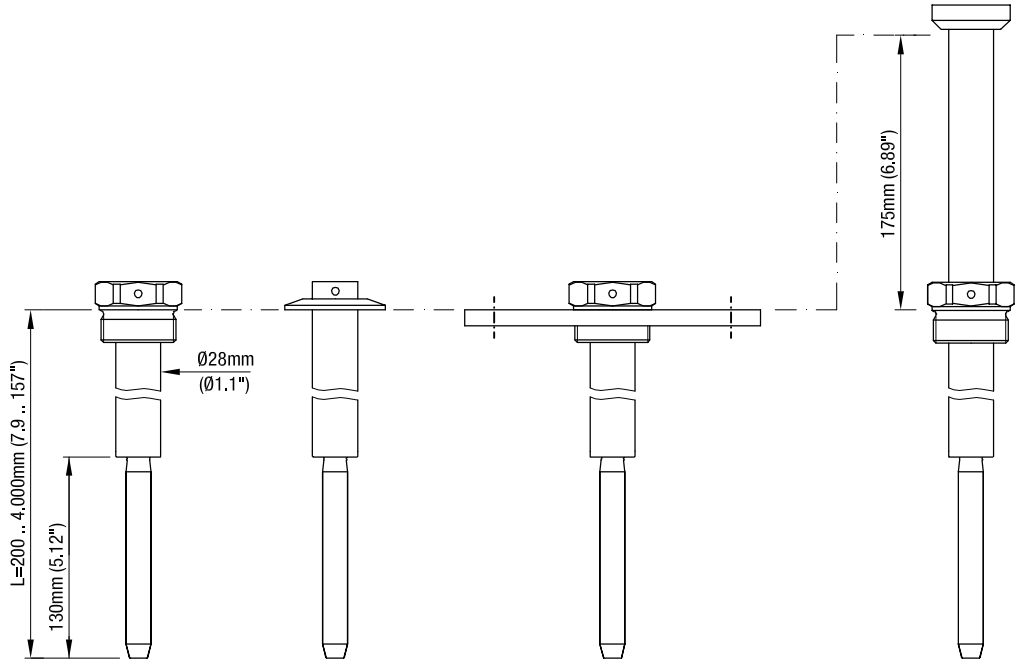

Thread | Triclamp | Flange | Temperature extended shaft (pos.3 2)

Dimensions / Spare parts

MN 4040

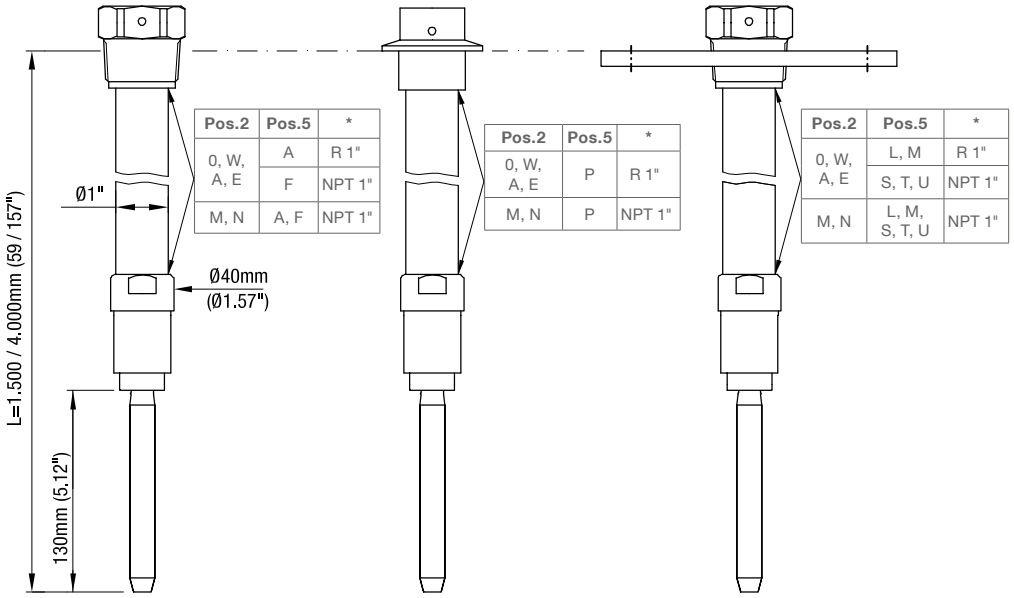

Pos.2	Pos.5	*
0, W, A, E	A	R 1"
	F	NPT 1"
M, N	A, F	NPT 1"

Pos.2	Pos.5	*
0, W, A, E	P	R 1"
M, N	P	NPT 1"

Pos.2	Pos.5	*
0, W, A, E	L, M	R 1"
	S, T, U	NPT 1"
M, N	L, M, S, T, U	NPT 1"

Thread Triclamp Flange

Extension tube NOT part of delivery

*Thread on extension tube

Flanges

code	type	number of holes	d2	Lk	D	T (thickness)
L	flange DN100 PN6	4	18 mm (0.71“)	170 mm (6.69“)	210 mm (8.27“)	16 mm (0.63“)
M	flange DN100 PN16	8	18 mm (0.71“)	180 mm (7.09“)	220 mm (8.66“)	20 mm (0.79“)
S	flange 2“ 150lbs	4	19.1 mm (0.75“)	120.7 mm (4.75“)	152.4 mm (6.01“)	19.1 mm (0.75“)
T	flange 3“ 150lbs	4	19.1 mm (0.75“)	152.4 mm (6.0“)	190.5 mm (7.5“)	23.9 mm (0.94“)
U	flange 4“ 150lbs	8	19.1 mm (0.75“)	190.5 mm (7.5“)	228.6 mm (9.0“)	23.9 mm (0.94“)

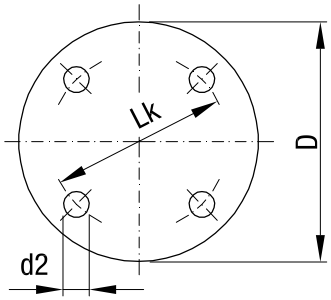

Spare parts

Electronic board	Article number	Price
Relais DPDT 21 .. 230 V AC 22 .. 45 V DC	pl405265	•
PNP 20..40V DC	pl405266	•

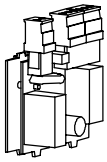

Wolf Process Automation
info@wpa.ie
wpa.ie

Electrical installation

Universal voltage
Relay DPDT

Power supply:
21 .. 230 V 50 - 60 Hz ±10%* 22 VA
22 .. 45 V DC ±10%* 2 W
*incl. ±10% of EN 61010

Fuse on power supply:
max. 10 A, fast or slow, HBC, 250 V

Signal output:
Floating relay DPDT

AC max. 250 V, 8 A, non inductive
DC max. 30 V, 5 A, non inductive

Fuse on signal output:
max. 10 A, fast or slow, HBC, 250 V

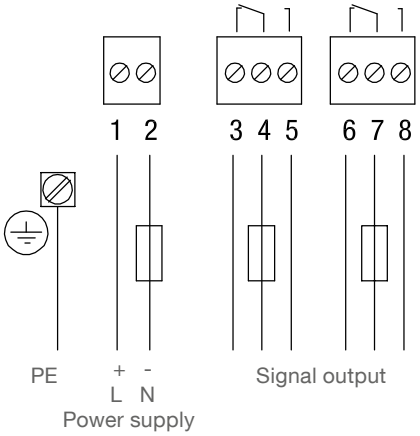

3-wire
PNP

Power supply:
20 .. 40 V DC ±10%*
*incl. ±10% of EN 61010
Input current: max. 0.5 A

Fuse:
max. 4 A, fast or slow, 250 V

Signal output:
max. 0.4 A
Output voltage equal to input voltage, drop <2.5 V

Load for example:
PLC, relay, contactor, bulb

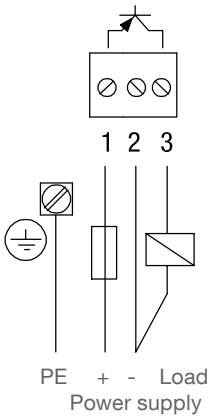

Wolf Process Automation
info@wpa.ie
wpa.ie